TRIATHLON
AUSTRALIA

Race Competition Rules

JULY 2013

Version July 2013

These rules should be read in conjunction with the TA Participant Policy Document by event organisers, Technical Officials and participants.

The original (source) document for these rules is the electronic version, which can be found on Triathlon Australia's website (www.triathlon.org.au).

Approved for release: July 17th 2013

Contact

Street Address:
Level 3, 256 Coward St
Mascot, NSW, 2020
Postal Address:
PO Box 13,
Alexandria, NSW, 1435

Ph: 61 2 9972 7999
Email: info@triathlon.org.au
Technical Enquiries: technical@triathlon.org.au

For information about Triathlon Australia:

***Web* www.triathlon.org.au**

Table of Contents

Table of Contents *2*

INTRODUCTION *3*

Authority **3**

Reference **3**

Purpose **3**

1. GENERAL CONDUCT *4*

2. SWIMMING CONDUCT *5*

3. CYCLING CONDUCT *6*

4. RUNNING CONDUCT *11*

5. TRANSITION AREA CONDUCT *12*

6. PENALTIES *12*

7. PROTESTS *14*

8. APPEALS *16*

9. PARATRIATHLON CONDUCT *17*

10. CROSS TRIATHLON / WINTER TRIATHLON *29*

11. MODIFICATIONS TO THE RULES *29*

12. EXCEPTIONS TO THE RULES *29*

13. SPECIAL RULES *30*

14. UNAUTHORISED EXCEPTIONS OR ADDITIONS *30*

15. RULE CHANGES *30*

APPENDIX A: DEFINITIONS *31*

APPENDIX B: EXAMPLES OF YELLOW AND RED CARD INFRINGEMENTS *34*

INTRODUCTION

Authority

The Triathlon Australia National Technical Committee (NTC), a subcommittee of the Triathlon Australia Board, has the responsibility to ensure that the technical aspects of triathlon, duathlon and aquathlon are of the highest quality, with particular emphasis on the safety of each competitor and the fairness of each event.

Any difficulty in the interpretation or application of these Race Competition Rules (RCR) should be referred through Triathlon Australia (TA) to the Chair of the NTC without delay.

Reference

This document is to be read in conjunction with the TA Participant Policy Document that can be found on the Triathlon Australia website www.triathlon.org.au.

Purpose

The TA RCR are intended to:

a. Create an atmosphere of sportsmanship, equality and fair play;

b. Optimise safety and protection;

c. Emphasise ingenuity and skill without unduly limiting the competitor's freedom of action;

d. Penalise competitors who seek to gain an unfair advantage; and

e. Endorse the principle that triathlon is an individual sport and encourage individual performance and initiative.

1. GENERAL CONDUCT

These rules are applicable across the entire course.

1.1. Competitors must:

a. practise good sports conduct at all times;

b. be responsible for their own safety, the safety of their own equipment and be considerate of the safety of others;

c. be responsible for understanding and following the TA RCR;

d. obey instructions from event officials;

e. obey traffic regulations unless otherwise instructed by an event official;

f. treat other competitors, officials, volunteers and spectators with respect and courtesy;

g. avoid the use of abusive language;

h. be responsible for keeping on the designated course;

i. not wear, use or carry items deemed to be a hazard to self or others e.g. a hard cast, jewellery, glass/metal containers or electronic and entertainment devices such as, but not limited to, mobile phones, mobile disc players, MP3 players or 2 way communication devices;

j. not use any equipment which may provide an unfair competitive advantage;

k. not obstruct or interfere with the forward progress of another competitor, or jeopardise the safety and welfare of another competitor or race official or spectator or member of the public;

l. not accept assistance from anyone other than an event official;

m. not discard any equipment on the course, except at the approved dedicated locations;

n. withdraw immediately from the event if deemed and informed by the event medical personnel that the competitor appears to present a danger to the health or welfare of either the competitor or others;

o. not cause offence to others through deliberate acts of nudity, or personal toilet which might be seen in public;

p. A wetsuits will fit to the athletes' body tightly while they are swimming; and

q. A competitor may wear a speed suit that meets the following criteria at any time during an event. An approved speed suit is defined as:

A speedsuit must be comprised of 100% textile material such as nylon or lycra and must not include rubberised material such as polyurethane or neoprene. The speedsuit may contain a zipper.

2. SWIMMING CONDUCT

2.1 A competitor may use any swimming stroke for propulsion through the water. It is permissible to tread water or float.

2.2. A competitor may stand on the bottom or rest by holding an object such as a buoy or stationary boat. However, a competitor may not make use of the bottom or an object to make forward progress.

2.3. In an emergency, a competitor should raise an arm overhead and call for assistance. Once assistance is rendered beyond the provision of an object on which to rest, the competitor must withdraw from the event.

2.4. The temperature limits for the use of wetsuits and maximum time to be in the water for the varying swim distances are as follows:

a. Elite, Under-23, Open and Junior competitors

Distance	Forbidden Above	Mandatory Below	Maximum Time
Up to 1500m	20° C	14° C	30 minutes
1501m – 3000m	23° C	15° C	1 hour 40 minutes
3001m and above	24° C	16° C	2 hours 15 minutes

b. Under-19 and Age Group competitors

Distance	Forbidden Above	Mandatory Below	Maximum Time
Up to 1500m	24° C	14° C	1 hour 10 minutes
1501m – 3000m	24° C	15° C	1 hour 40 minutes
3001m and above	24° C	16° C	2 hours 15 minutes

2.5. A competitor must wear the swim cap if provided by the Race Director. For aquathlons or other multi-swim events the wearing of the swim cap if provided is compulsory for the first swim leg and optional in subsequent swim legs.

2.6. Competitors must not use:

a. Artificial propulsion devices;

b. Flotation devices;

c. Gloves or socks (including but not limited to compression socks);

d. Wetsuits with thickness exceeding 5mm;

e. Wetsuit bottoms of any length without a wetsuit top;

f. Wetsuits when they are forbidden because of the water temperature; and

g. Any clothing containing rubberised material in a non-wetsuit swim.

3. CYCLING CONDUCT

3.1 A competitor is not permitted to cycle without appropriate footwear or with a bare torso.

3.2 A competitor is not permitted to make any forward progress without the bicycle and all of its component parts.

3.3 Bicycle helmets are compulsory and must be approved by a testing authority which is recognised by a national federation that is an affiliate of the International Triathlon Union (ITU).

3.4 An alteration or addition to any part of the bicycle helmet including the chin strap, or the omission of any part of the helmet, including an outer cloth cover, is prohibited.

3.5 The bicycle helmet must remain securely fastened on the head of a competitor at all times once the bicycle is removed from the bicycle rack, while on the bicycle course and until the bicycle is replaced on the bicycle rack.

3.6 A competitor must clearly display the race identification number(s) at all times on the bicycle course if provided by the Race Director. Those not complying may incur a Stop-Start penalty. However if the Technical Official considers that the identification number has been unintentionally lost, then the competitor will not be penalised.

Rules 3.7 to 3.12 inclusive apply to non-drafting events only

3.7 Illegal Pass

A competitor passing on the inside (left hand side) of another competitor will receive an Illegal Pass penalty.

3.8 Blocking

A competitor who has completed a pass and is not passing another competitor or motorcycle or vehicle and who fails to move safely and immediately to the left of the cycle lane will receive a Blocking penalty.

3.9 Bicycle or Motorcycle Draft Zone

a. For all events with a cycling distance up to and including 40 kilometres, the bicycle draft zone is a rectangle 7 metres long and 3 metres wide that surrounds every bicycle competitor and every motorcycle on the bicycle course. The front edge of the front bicycle and motorcycle wheel defines the centre of the leading 3 metres edge of the rectangle (***Diagram 1***). Competitors have 15 seconds to pass through this zone.

b. For all events with a cycling distance greater than 40 kilometres, the bicycle draft zone is a rectangle 12 metres long and 3 metres wide that surrounds every bicycle competitor and every motorcycle on the bicycle course. The front edge of the front bicycle and motorcycle wheel defines the centre of the leading 3 metres edge of the rectangle ***(Diagram 1)***. Competitors have 25 seconds to pass through this zone.

3.10 Vehicle Draft Zone

a. For all events, the vehicle draft zone is a rectangle 35 metres long by 5 metres wide that surrounds every vehicle on the bicycle course **(*Diagram 5*)**. The centre of the front edge of the vehicle defines the centre of the leading 5 metres edge of the rectangle.

b. The driver of any race participation vehicle is responsible to ensure that this zone is not overlapped by the draft zone of a competitor.

3.11 Drafting

a. The draft zone of a competitor may not overlap the draft zone of another competitor or motorcycle or vehicle except in the following circumstances:

(i) When the competitor is in the process of legally passing another competitor or motorcycle or vehicle;

(ii) For safety reasons;

(iii) For an aid station;

(iv) For entrance to or departure from a transition area; and

(v) In making an acute turn.

b. When passing a forward competitor or motorcycle, the rear competitor is allowed a maximum of 15 seconds to pass through the 7 meter draft zone and 25 seconds to pass through the 12 meter draft zone. Failure to observe this may result in a drafting penalty.

c. When passing a forward vehicle, the rear competitor is allowed a maximum of 90 seconds to pass through the draft zone. Failure to observe this may result in a drafting penalty.

d. At every instant during the overlapping of draft zones, the rear competitor must be seen to be gaining on the forward competitor or motorcycle or vehicle. Failure to observe this may result in a drafting penalty.

e. Once passed, a competitor must immediately commence to drop back out of the draft zone of the forward competitor before attempting to re-pass. A competitor is deemed to have been passed once the leading edge of the front wheel of the passing bicycle has moved in front of the leading edge of the front wheel of the competitor's bicycle. Failure to observe this may result in a drafting penalty.

Diagram 1 **Distance of Drafting Zone for ALL Competitors**

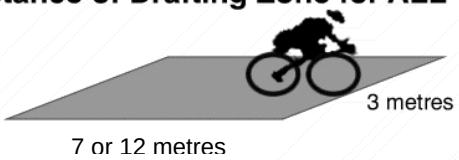

Diagram 2 **Drafting**

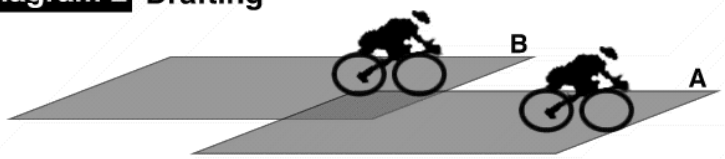

A has overtaken **B** and **B** is now drafting the lead cyclist **A**. **B** must drop out of **A**'s draft zone before attempting to repass **A**. **A** must move to the Left Hand Side of the road when safe otherwise **A** can be called for blocking. **B** can only overtake **A** on **A**'s Right Hand Side.

Diagram 3 **Blocking**

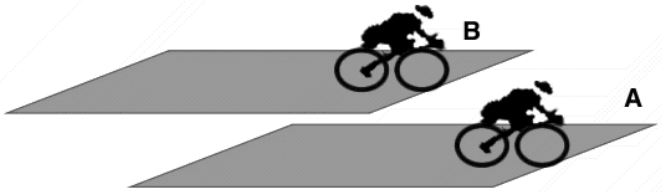

A and **B** are maintaining adequate separation between each other, even though they are abreast to one another. **B** is not drafting **A** in this instance. **A** however, is now in a BLOCKING position. If **A** remains out to the Right Hand Side, **A** will receive a blocking penalty.

Diagram 4 **Drafting and Not Drafting**

A and **B** are maintaining adequate separation. **C** is not attempting to pass **B**. **C** is drafting **B**. **A** and **B** are not drafting.

Diagram 5 **Vehicle Draft Zone**

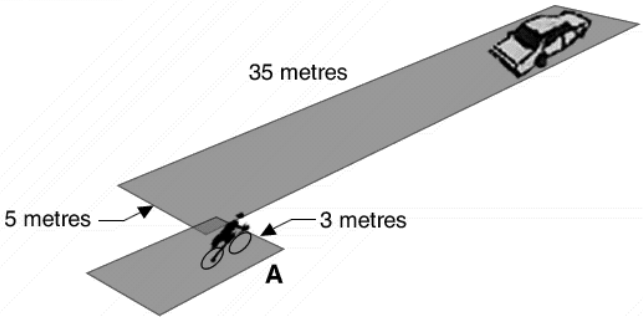

A is travelling at the same speed as the vehicle. **A** is drafting. **A** must move to the Left Hand Side of the road otherwise **A** can also be called for blocking.

3.12 Bicycles must have all of the following characteristics:

a. No more than 2 metres long and 75 centimetres wide;

b. Measure at least 24 centimetres from the ground to the chain wheel axle;

c. A vertical line touching the front most point of the saddle will be no more than 5 centimetres in front of and no more than 15 centimetres behind a vertical line passing through the centre of the chain wheel axle (***Diagram 6***), and a competitor must not have the capability of adjusting the saddle beyond these lines during competition;

d. Measure no less than 54 centimetres and no more than 65 centimetres between a vertical line passing through the centre of the chain wheel axle and a vertical line through the centre of the front wheel axle (***Diagram 7***). Exceptions may be given only by the Technical Delegate for the bicycles of very tall or very short competitors;

Diagram 6 **Saddle Fore-Aft Position**

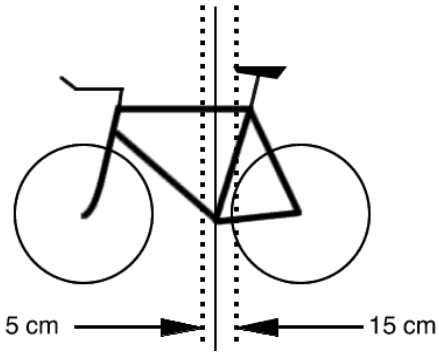

Diagram 7 **Front to Centre Distance**

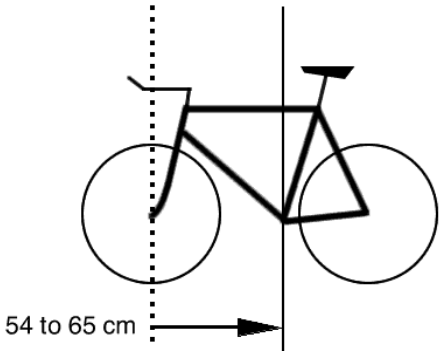

e. Fairings which reduce air resistance are prohibited;

f. The front wheel may be a different diameter from the rear wheel but must be of spoke construction;

g. Disk wheels or covers are allowed on the rear wheel only, however this provision may be changed by the Race Referee in the interests of safety (e.g. in the case of the potential for high winds);

h. No wheel may contain mechanisms which are capable of accelerating it;

i. Fixed-gear bicycles (or fixed-wheel bicycle, sometimes known as a fixie) are not permitted. This is a bicycle that has no freewheel, meaning it cannot coast — the pedals are always in motion when the bicycle is moving;

j. Handlebar ends must be plugged, tubular tires securely glued, headsets tight and wheels true;

k. There must be an operational brake on each wheel;

l. Forward facing brake levers are illegal on all bicycles. This applies to brake levers on standard curved handlebars, cow horn and aero bar mounted brake levers; and

m. In draft legal events (not Long Distance) for Elite, Under-23 and Junior competitors and TA approved draft legal team events, the ITU Competition Rules* apply including, but not limited to:

(i) Only traditional drop bars are permitted;

(ii) Clip-on bars will be permitted provided they do not extend more than 15 centimetres beyond the front wheel axle and they are no longer than the brake levers foremost line;

(iii) Straight forward facing clip-on bars must be bridged and must not carry forward facing brake levers;

(iv) No forward facing bar or gear shifters are allowed on the end of the clip-on bars. The only exception will be grip shifters; and

(v) Elbow pads are permitted.

*Current ITU Competition rules can be downloaded from www.triathlon.org.

4. RUNNING CONDUCT

4.1 A competitor may not crawl.

4.2 A competitor may not run with a bare torso or without shoes on any part of the run course of an event.

4.3 A competitor must clearly display the race identification number on their front at all times on the run course if provided by the Race Director. Those not complying may incur a Stop-Start penalty. However if the Technical Official considers that the identification number has been unintentionally lost, then the competitor will not be penalised.

5. TRANSITION AREA CONDUCT

5.1 A competitor may only have a bare torso when moving from the swim exit to their bicycle rack or moving from their bicycle rack to the swim entry, the latter in a multi swim event.

5.2 A competitor must mount and dismount the bicycle at the respective designated mounting and dismounting zones.

5.3 A competitor must at all times rack his/her own bicycle only at their designated bicycle rack location and leave it in a stable position.

5.4 A competitor must at all times place all their equipment at their designated bicycle rack location.

5.5 A competitor must not interfere with another competitor's equipment but where accidental interference occurs the offending competitor must replace the equipment to its former position and state.

6. PENALTIES

6.1 General Rules

Failure to comply with the TA Race Competition Rules may result in a competitor being penalised, disqualified, suspended, or expelled.

The nature of the rule violation will determine the subsequent penalty.

Technical Officials are allowed to assess penalties, even if the infringement is not listed, if the Technical Official deems an unfair advantage has been gained, or if a dangerous situation has been created.

6.2 Notification of Penalties

A Technical Official should carry out the following actions when issuing a penalty to a competitor:

a. Gain the attention of the competitor;

b. Confirm with the competitor their race number;

c. Show the competitor a Yellow or Red Card and inform the competitor of the rule infringement; and

d. Advise the competitor what action needs to be taken.

If the Technical Official considers that a penalty cannot be issued safely, it is not mandatory for that Technical Official to penalise the competitor in person. In this situation the competitor is not expected to attend the Penalty Box.

A Technical Official must complete a Violation Report to the Race Referee either if they have issued a red card to a competitor, if a Yellow Card penalty was not served (example: an athlete who was penalised for drafting fails to report to the Penalty Box to serve the time penalty) or if the Technical Official was unable to penalise a competitor (yellow or red card) in person.

Where the Race Referee's ruling on an infringement is to disqualify a competitor, the Race Referee reviews the Violation Report and then must post the ruling (competitor race number and rule infringed) on the Penalties Notice Board, which is to be displayed in a prominent location that competitors will have access to at the finish e.g. the athlete recovery area. The Race Referee may wish to personally meet with a disqualified competitor to discuss the ruling but this is not a mandatory requirement. Penalties not posted within one hour of the last competitor finishing the event are invalid.

6.3 Competitor Conduct

When shown a Yellow or Red Card by a Technical Official, a competitor must:

a. Confirm with the Technical Official their race number; and

b. Acknowledge and obey any instruction from the Technical Official.

A competitor may complete the event even if shown a Yellow or Red Card by a Technical Official.

6.4 Stop–Start Penalty

This is a penalty for an infringement, which is served with a Technical Official either near where the infringement occurred, in a safe location on the course or in the Penalty Box. This penalty requires the display of a Yellow Card by a Technical Official. Appendix B lists examples of stop-start penalty infringements.

6.5 Time Penalty

This is a time penalty for an infringement, served with a Technical Official in a Penalty Box. This penalty requires the Technical Official and the competitor to follow the instructions detailed in point 6.2. Appendix B lists examples of time penalty infringements.

Paratriathlon type events: For infractions incurred on the run a 15 second penalty is applied and is served in the penalty box.

6.6 Duration of Time Penalty

The duration of the penalty will vary according to the segment of the race in which the infringement occurs.

Bicycle Distance	Time Penalty for Bicycle Course Infringements
≤40 km	3 minutes
>40.1 km	5 minutes

For the Swim and Run segments (and also aquathlons) the Technical Delegate and/or Race Referee should discuss with the Race Director as to whether a time penalty should apply in these segments. If a time penalty is to apply it will be 3 minutes.

6.7 Two or More Yellow Card Penalties

If a competitor receives two or more yellow card penalties the competitor may complete the event, as the Race Referee will rule on the infringement(s) at the conclusion of the event and if ratified, the competitor can expect to be disqualified.

6.8 Red Card Penalty

This is a penalty for a major infringement. After receiving a red card penalty, the competitor may complete the event, as the Race Referee will rule on the infringement(s) at the conclusion of the event and if ratified the competitor can expect to be disqualified. Appendix B lists examples of red card infringements.

6.9 Disqualification

This is a penalty awarded by the Race Referee on personal observation or as a result of a Violation Report or Reports made by a Technical Official(s) or a finding by the Race Competition Jury. This penalty removes a competitor as a finisher from the results of an event.

7. PROTESTS

If a competitor has a concern regarding a penalty they must contact either the Race Referee or the Technical Delegate. If they wish to lodge a Protest they must do this with the Race Referee within the time limit explained in the following paragraphs.

A competitor may file a protest with the Race Referee provided that the action protested has not previously been reported by a Technical Official and ruled upon by the Race Referee.

7.1 Protest Concerning the Course

A protest that the course does not conform to the requirements of the Sanctioning Authority, or is unsafe, must be made in writing to the Race Referee at least 24 hours before the start of the race.

7.2 Protest Concerning Eligibility

A protest concerning the eligibility of a competitor must be made in writing to the Race Referee. The affected competitor may compete.

7.3 Protest Concerning Equipment

A protest concerning a competitor's equipment being in violation of the conditions set out in these Race Competition Rules must be made in writing to the Race Referee no later than 30 minutes after the protesting competitor's finish time.

7.4 Protest Against Another Competitor or an Official

A protest against the actions of another competitor or official carried out before, during or after the race must be made in writing to the Race Referee within 30 minutes of the protesting competitor's finish time. Such a protest may be submitted only if the protesting competitor claims that the action of the alleged offender was detrimental to the performance of the protester.

7.5 Protest Concerning Timekeeping

A protest concerning an error in timekeeping must be made in writing to the Race Referee within 30 minutes after the posting of the official results. A state or territory association may protest an error in timekeeping in the official results of a national or international championship event within 30 days after the competition, in writing, to the TA Board through the TA National Technical Committee.

7.6 Consideration of a Protest

A protest will not be considered unless:

a. The protest is submitted to the Race Referee within the time laid down in the foregoing paragraphs;

b. The protest is accompanied by a Protest Fee of $100.00 for all events unless the sanctioning authority imposes a lesser fee, and which will be refunded only if the protest is upheld;

c. The protest is submitted in writing, preferably on a TA Race Protest Form which may be obtained from the Race Referee; and

d. A protest cannot be made on a judgement call by a Technical Official.

8. APPEALS

A competitor may file an appeal with the Technical Delegate, or STTA representative if a Technical Delegate was not appointed, against a ruling of the Race Referee provided that the decision appealed against has not previously been the subject of an appeal and ruled upon by the Race Competition Jury.

8.1 Consideration of an Appeal (to the Race Competition Jury)

An appeal against a decision will not be considered unless:

a. The appeal is submitted to the Technical Delegate within 30 minutes of the Race Referee's decision being formally advised;

b. The appeal is accompanied by an Appeal Fee of $100.00 for all events unless the sanctioning authority imposes a lesser fee, and which will be refunded only if the appeal is upheld; and

c. The appeal is submitted in writing, preferably on a TA Race Appeal Form which can be obtained from the Technical Delegate.

8.2 Appeal to the TA Board

A competitor whose appeal is dismissed by the Race Competition Jury (RCJ) may appeal to the TA Board.

a. The only ground of appeal available to an aggrieved competitor following determination by the RCJ is that the procedure relating to appeals set out in Rule 9.1 of the TA RCR was not properly followed and/or implemented;

b. Any appeal under this section must be lodged with the CEO of TA within 48 hours of receipt by the aggrieved competitor of the decision of the RCJ;

c. Appeals under this section must be in writing stating precisely the ground of appeal relied upon by the aggrieved competitor;

d. The timetable and procedure for any appeal to the TA Board will be set by the President of TA or his/her nominated representative. Such timetable and procedure shall take into consideration the need for expediency and finality in regard to race results in addition to any other matter deemed significant by the President (or nominee) in the circumstances of the appeal;

e. When considering whether the ground of appeal has been made out the TA Board will disregard any technical breach of the rules that in their opinion had no bearing on the outcome of the appeal to the RCJ or merits of the competitor's appeal to the RCJ; and

Any appeal to the TA Board against the decision of the RCJ must include a fee of $500.00 made payable to Triathlon Australia which is non-refundable should the appeal to the TA Board be dismissed.

9. PARATRIATHLON CONDUCT

9.1 General

a. This section contains the rules which affect only paratriathlon.

(i) All National and State Championships for Triathlon, Duathlon and Aquathlon shall be strictly run in accordance to these rules.

(ii) All other non-Championship based events shall regarded as “inclusion events and therefore these rules are used as a guide particularly with reference to equipment, classification, handlers, and guides. In these instances race competition rules for inclusion events shall be enforced for the purposes of safety and the spirit of the event where the Technical Delegate and the LOC or Race Director will decide on the status of the paratriathlon competition; and

(iii) It is mandatory for all paratriathlon competitors, who use catheters or other urinary diversion devices, to prevent spillage by using a catheter bag at all times. This includes during training, competition and classification.

9.2 Paratriathlon Categories

a. Paratriathlon Categories have been established based on physical disabilities. Refer to the TA Paratriathlon Classification Rules and Regulations for eligible impairments. Medical evidence shall be required for classification.

b. The six (6) categories are as follows:

(i) TRI 1 - Wheelchair user: Includes Paraplegic, Quadriplegic, Polio, Double Leg Amputee and disabilities that prevent the safe use of a conventional bicycle. Must use a handcycle (as described in section 6.11) on the bike course and racing wheelchair (as described in section 6.13) on the run;

(ii) TRI 2 - Severe leg impairment, including above knee amputees. Must ride a bicycle and run with above knee prosthesis or run using crutches;

(iii) TRI 3 - Les Autres: Includes athletes with Multiple Sclerosis, Muscular Dystrophy, Cerebral Palsy, double leg amputee or paralysis in multiple limbs. Must ride a bicycle or tricycle and run. May use braces or prosthesis;

(iv) TRI 4 - Arm impairment: Includes paralysis, above elbow amputees and below elbow amputees, or impairment in both upper limbs. Must ride a bicycle. May use prosthesis, brace or sling on the bike and/or run;

(v) TRI 5 - Moderate leg impairment: Includes below-knee amputees. Must ride a bicycle and may run with prosthesis;

(vi) TRI 6a and TRI 6b - Visual Impairment: Includes avisual acuity of less than 6/60 vision or visual field less than 40 degrees with best corrective vision. One guide of the same gender is mandatory throughout the race.

c. All paratriathletes are allowed to compete in triathlon, duathlon and aquathlon events;

d. All categories start together in a paratriathlon event or may start together as a separate wave as part of an existing National or State Championships. In case of an event with more than 100 entries, the TD shall create two start waves in consultation with the LOC or Race Director in which the athletes should be grouped together per category and per gender; and

e. In a duathlon or aquathlon event, a paratriathlon race should be organised in two wave starts with a difference of at least one (1) minute. TRI 1 athletes shall start in the first wave and the rest of the athletes in the second wave.

9.3 Classification

a. Paratriathlon Classification Rules and Regulations can be found in Triathlon Australia Classification Policy.

b. All Paratriathletes competing at a National or State Championship competition must have a National paratriathlon classification to ensure they meet the minimal eligibility criteria for competition and are assigned an appropriate profile and category.

Paratriathletes requiring classification will need to:

(i) be available to attend an National Classification appointment with a Triathlon Australia designated Classification Panel prior to the competition;

(ii) provide, at time of classification, the “Certificate of Medical Diagnosis” or “Medical Diagnostic Form for Athletes with a Visual Impairment” signed by the appropriate medical personnel, a passport sized photo and any other relevant medical documentation; and

(iii) Paratriathletes that have been classified for ITU Sanctioned events shall not be required go through the classification process unless instructed by the Triathlon Australia Head Classifier.

c. Paratriathletes competing at National or State Championship events, where classification is not available, will be informed by Triathlon Australia to submit specific medical documentation to TA, no later than 4 weeks before competition, so that a temporary classification can be assigned to them.

9.4 Paratriathlete pre-event requirements

a. Where advised a compulsory briefing of paratriathletes will be held before all events and will be conducted by the Race Referee. Paratriathlon coaches may also attend the briefing. Alternatively, a written race briefing will be provided 1 week before competition and issued to the paratriathlete via email. A further briefing maybe staged just prior to competition for the purposes of updating race conditions.

b. All guides and handlers must be registered prior to competition.

c. All athletes will pick up their own race packet during registration at the event. The race packet will include:

(i) TRI 1: red swim cap, 3 race number stickers for the helmet, 1 race number sticker for the handcycle, 1 race number sticker for the race wheelchair, 1 race number sticker for the daily wheelchair, 1 race bib number for the athlete and 2 race bib numbers for the handlers;

(ii) TRI 4: yellow swim cap, 3 race number stickers for the helmet, 1 race number sticker for the bike, 3 race number stickers for the prosthesis , 1 race bib number for the athlete and 1 race bib number for the handler;

(iii) TRI 2, TRI 3 and TRI 5; yellow or green swim cap, 3 race number stickers for the helmet, 1 race number sticker for the bike, 3 race number stickers for the prosthesis/aiding devices, 1 race bib number for the athlete and 1 race bib number for the handler; and

(iv) TRI 6: 1 green swim cap for the athlete and 1 white swim cap for the guide, 6 race number stickers for the helmets, 1 race number sticker for the bike, 1 race bib number for the athlete and 1 race bib number for the guide with the word “GUIDE” written on it.

9.5 Paratriathlon Handlers

a. Securing qualified aides (handlers) shall be the responsibility of the paratriathlete, and all such handlers shall be identified to and receive credentials from the TD, LOC or Race Director at registration.

b. Handlers are to be allotted as follows:

(i) One (1) handler for categories TRI 2, TRI 3, TRI 4, and TRI 5;

(ii) Up to two (2) handlers for category TRI 1; and

(iii) No handlers for category TRI 6 (Guides may act as the handler for this category).

c. Handlers are specifically allowed to assist paratriathletes by:

(i) Helping with prosthetic devices or other assistive devices;

(ii) Lifting paratriathletes in and out of handcycles and wheelchairs;

(iii) Removing wetsuits or clothing;

(iv) Repairing bikes and helping other equipment at the paratriathlete's Transition Zone area or at the official wheel station is provided. TRI 6 guides can help to repair the bike along the whole bike course, without receiving outside assistance;

(v) All handlers shall be subject to the TA Race Competition Rules in addition to further regulations deemed appropriate or necessary by the Race Referee; and

(vi) Any action taken by a handler, which propels the paratriathletes forward may result in a disqualification.

9.6 Paratriathlon Registration Process

a. Pre-event registration is compulsory for paratriathletes, handlers and guides before competition:

(i) Paratriathletes must communicate to the registration officials whether they will have their own handler, or if they need an LOC handler;

(ii) Paratriathletes must attend the briefing with their handler if advised as per 6.4 a.; and

(iii) Immediately after the registration, they will collect their race packet and their handler will collect the handlers' t-shirt, as provided by the LOC.

b. Paratriathletes and handlers must check in together;

(i) Handlers need to present themselves with the race bib number and the official handler's t-shirt before gaining access to the transition area

(ii) If a paratriathlete is present without his/her handler/s, he/she has to wait until the handler/s arrive. If the paratriathletes wishes to register on his/her own, then the handler will not have access to the Field of Play;

(iii) Once a handler has been registered, they can only be replaced in exceptional circumstances and only by the TD.

(iv) Timing chips will be delivered during this process;

(v) Equipment (prosthesis, crutches, etc) for the pre-transition area (must have a Race number on it) and will be checked upon entry to the transition area.

9.7 Pre-Transition Area conduct

a. If a pre-Transition area exists, competitors in categories TRI 1, TRI 2, TRI 3 and TRI 5 may remove their wetsuits before accessing wheelchairs or collecting other ambulatory/prosthetic devices in this area. Only the TRI 1 handlers are allowed in this area.

b. Paratriathlete handlers racing in the TRI 1 category are allowed to assist their assigned paratriathlete in this area but cannot propel nor push TRI 1 paratriathletes forward.

c. The wheelchairs provided by the TRI 1 paratriathletes for this area must have functional brakes.

d. The closest available area to the swim exit area will always be used to line up the TRI 1 wheelchairs, according to their race number.

e. There should be a dedicated space in the pre-transition area, to set up and display all prosthetic devices/crutches for paratriathletes from categories TRI 2, TRI 3 and TRI 5 (if required). Two Technical Officials will coordinate the distribution of these equipment devices to the athletes as they exit the water and receive notification of the race number from the TO situated at the water exit. All of the equipment will be lined up in numerical order.

9.8 Transition Area Conduct

a. No guide dogs will be allowed in the transition area at any time.

b. The LOC shall provide a minimum number of swim exit handlers at swim exit area, who will be responsible for assisting the paratriathletes from the swim exit to the pre-transition area. The final number of swim exit handlers shall be determined by the Technical Delegate. Only designated handlers and Officials will be permitted access to enter this area. Their training should be supervised by the Technical Delegate to ensure correct lifting and carrying techniques are used.

c. During the swim exit, the competitors will receive assistance from the swim exit handlers according to their swim cap colours, as follows:

(i) Red: Paratriathlete needs to be lifted from the swim exit to the wetsuit removal area;

(ii) Yellow: Paratriathlete needs to be supported to walk/run from the swim exit to the wetsuit removal area;

(iii) Green or white: Paratriathlete does not need any assistance at the swim exit; and

(iv) White caps will be used for the guides.

d. Bicycles, tandems, handcycles or tricycles are not allowed from the swim exit to the transition area.

e. All equipment shall remain within each paratriathlete's assigned space in the transition zone. The only exception to this rule is when a "pre-transition area" exists. (This pre-transition area shall be set-up in coordination with the Technical Delegate).

f. All TRI 6a and TRI 6b positions in the transition zone must be the closest to the mount line (women and men), followed by the rest of the categories TRI 5, TRI 4, TRI 3, TRI 2, and TRI 1. TRI 1 paratriathletes are allowed to ride the handcycle inside the transition area.

9.9 Paratriathlon Swimming Conduct/Equipment

a. For safety reasons, categories will be presented during the paratriathlete presentation at race start the following order: TRI 6, TRI 5, TRI 4, TRI 3, TRI 2, TRI 1. For safety reasons, TRI 1 competitors should always enter the water after all other paratriathletes are in place.

b. The swim start shall be an "in-water" start.

c. Paratriathletes will not be required to exit the water between laps.

d. Artificial propulsive devices including (but not limited to) fins, paddles, or floating devices of any kind are not allowed. All prosthetic and/or orthoses devices are considered propulsion devices. Use of any such devices will result in disqualification. Any objects, screws or prosthetic devices that may be potentially harmful can be banned by the Technical Delegate prior to the competition.

e. Wetsuit use is determined by the chart below: INSERT CHART

If any competitor has not completed the swim course within this time limit and is more than 100 metres short of the finish, they shall be removed immediately from the water.

f. Wetsuits will not be permitted when the water temperature is 28° Celsius or above.

g. The swim portion may be cancelled if the official water temperature is lower than 16° Celsius (Official water temperature is calculated as indicated in the following chart)

h. If the water temperature is lower than 20° Celsius and the air temperature is lower than the water temperature, the adjusted value is the measured temperature decreased by 0.5°C every 1.0°C of difference between the air and water temperatures. This adjusted value is the official water temperature for paratriathlon events.

9.10 Paratriathlon Cycling Conduct/Equipment

a. Paratriathlon competitions are non-drafting events.

b. In paratriathlon competitions, the term "bike" used herein shall include bicycles, tandems, tricycles or handcycles.

c. All bikes shall be propelled by human force. Arms or legs can be used to propel the cycle, but not both. Any violation shall result in disqualification.

d. Bike specifications for paratriathlon competitions are outlined in the TA Race Competition Rules section 3.12.

e. The specifications of a tricycle are as follows:

(i) The tricycle is a vehicle with three (3) wheels of equal diameter. The front wheel, or wheels shall be steerable. The rear wheel(s) shall be driven through a system comprising of pedals and a chain;

(ii) Recumbent tricycles are not allowed;

(iii) All tricycles shall conform to the International Cycling Union (UCI) construction and measurements for a bicycle, including the bottom bracket, seat tube and saddle position (excluding the rear triangle);

(iv) Wheels of the tricycle may vary in diameter between 70 cm maximum and 55 cm minimum including the tyre, using conventional cycle components. Modified hub attachments may be used if necessary. The width of tricycle double wheels may vary between 85 cm maximum and 60 cm minimum, measured at the centre of each tyre as it touches the ground;

(v) If a tricycles two-wheel rear axle does not have a differential, only one wheel must be driven, due to the different speeds of the wheels in turns;

(vi) A tricycle shall not measure more than 200 cm in length and 95 cm in width overall;

(vii) The tricycles top tube may slope down rearwards, to an inclination parallel with the down tube to facilitate easy mounting by the rider;

(viii) The two wheels of a tricycle may be offset by a maximum of 10 cm either side of a centreline, which passes through the single wheel and the frame top tube; and

(ix) A tricycle shall be fitted with a safety bar to prevent the front wheel of a following tricycle from entering the space between the rear wheels. The safety bar must be fixed to the tricycle so that there is no risk of the bar moving during competition. The distance from the ground to the centre of the safety bar should be the same as the distance between the ground and the middle of the hub when the tyres are inflated to the pressure used in competition.

a) Protective shields, fairings or other devices, which have the effect of reducing resistance, are not allowed.

b) Artificial handgrips and prosthetics are allowed but may not be fixed to the bike. Rigid prosthetic adaptations that are mounted or fixed to any part of the bike are not allowed.

c) Except for handcycles (TRI 1), a rider's position shall be supported solely by the pedals, the saddle and the handlebars.

d) Paratriathletes in the TRI 2 category not wearing a prosthesis may use a support for the thigh only if there is no fixation of the thigh to the bicycle. (For example, the support may be a half tube attached to the cycle, with a closed base and maximum of 10 cm closed side at the base, but no "thigh fixing devices" are allowed).

e) Bikes must have two independent braking systems.

f) Handcycle and tricycles must have two braking systems, one at the front and one at the back. The braking system on the double wheels must be dynamic and act on both wheels.

g) All requests for impairment adaptations to any bike or handcycle must be submitted in writing to TA approval at least one (1) month before any event, with a clear explanation and pictures. If the adaptation is approved, a certificate will be sent by TA to the applicant within 10 working days

h) Technical officials, LOC or Race Director shall not be liable for any consequences deriving from the choice of equipment and/or any adaptations used by paratriathlete, nor for any defects it may have, or its non-compliance.

i) No guide dogs will be allowed on the bike course at any time.

j) No bike course shall have a maximum gradient of over 12% at the steepest section.

9.11 Paratriathlon TRI 1 Cycling Conduct

a. Paratriathletes must use a handcycle in a recumbent position.

b. Specifications of a recumbent position handcycle are as follows:

(i) A handcycle shall be an arm powered, three-wheeled vehicle with an open frame of tubular construction, which conforms to the general principles of the International Cycling Union's (UCI) construction for bicycles (except that the chassis frame tubes need not be straight). For the seat or backrest construction, the maximum frame tube diameter may not exceed the maximum defined by the general principles of UCI;

(ii) The single wheel may be of a different diameter to the double wheels. The front wheel or wheels shall be steerable; the single wheel, either front or rear, shall be driven through a system comprising handgrips and a chain. The handcycle shall be propelled solely through a chainset and conventional cycle drive train, of crank arms, chainwheels, chain and gears, with handgrips replacing foot pedals. It shall be propelled by the hands, arms and upper body only;

(iii) The athlete must have clear vision. As such, the horizontal of the paratriathlete's eye line must be above the crank housing/crank set, when (s)he is sitting with his/her hands on the handlebars facing forward at full extent, the tip of his/her shoulder blades in contact with the backrest and his/her head in contact with the headrest, when applicable. From this position, conforming measurements are calculated as follows: (#1) The distance from the ground to the centre of the paratriathlete's eyes and (#2) the distance from the ground to the centre of the crank housing (crank set). Measurement (#1) must be equal or greater than measurement (#2). All handcycles must have a mirror fixed either to the helmet of the rider or at some point on the front of the bike to ensure rearview vision is possible;

(iv) Adjustments to handcycle may not be made during the race;

(v) Wheels of the handcycle may vary in diameter between a 406 mm minimum and a 622 mm maximum. Modified hub attachments may be used if necessary.

(vi) The width of handcycle double wheels may vary between 55 cm minimum and

(vii) 70 cm maximum, measured at the centre of each tyre where the tyres touch the ground;

(viii) Disk wheels are not permitted for handcycles;

(ix) A handcycle shall not measure more than 250 cm in length or 70 cm in width;

(x) The shifting device can either be within the extremities of the handlebars, or on the side of the paratriathlete's body;

(xi) The largest chain ring shall have a guard securely fitted to protect the paratriathlete. This protection shall be made of solid material that is sufficiently robust and covers the chain ring fully over half of its circumference (180°) on the side facing the rider;

(xii) Maximum frame tube dimension shall be 80 mm, irrespective of tube material, or profile. Any fillets, or ribs, inserted at joints between tubes, shall be for strengthening purposes only. Non-functional, aerodynamic devices are not permitted for competition;

(xiii) A quick release body harness is permitted; and

(xiv) It is mandatory that a handcycle with two rear wheels should be fitted with a safety bar to prevent the front wheel of a following handcycle from entering the space between the rear wheels. A safety bar must not exceed the width of each rear wheel tyre and all tube ends must be closed or plugged. The safety bar must be fitted 15 mm (+ / - 2 mm) behind the wheels. It must be around tube (at least 18 mm in diameter) and made of adequately solid material to resist impact without bending or breaking. The distance between the ground and the bar axis must be 280 mm (+/- 10 mm). The structure and assembly of the safety bar must guarantee that normal bumps, which may be experienced during a race, don't affect the safe functioning of the bar (see diagram).

9.12 Paratriathlon TRI 1 Running Conduct/Equipment

a. TRI 1 competitors perform the run portion in a "racing wheelchair" and are governed by all TA Race Competition Rules with regards to safety.

b. The specifications of a "racing wheelchair" (hereafter referred to as "the chair") are as follows:

(i) The chair shall have two large wheels and one small wheel;

(ii) No part of the body of the chair may extend forwards beyond the hub of the front wheel and be wider than the inside of the hubs of the two rear wheels. The maximum height from the ground of the main body of the chair shall be 50 cm;

(iii) The maximum diameter of the large wheel, including the inflated tyre, shall not exceed 70 cm. The maximum diameter of the small wheel, including the inflated tyre, shall not exceed 50 cm;

(iv) Only one plain, round, hand rim is allowed for each large wheel. No mechanical gears or levers that propel the chair shall be allowed;

(v) Only hand operated, mechanical steering devices will be allowed;

(vi) Competitors must be able to turn the front wheel manually to the left and right;

(vii) No part of the chair may protrude behind the vertical plane of the back edge of the rear tyres;

(viii) It will be the paratriathlete's responsibility to ensure the wheelchair conforms to all the above rules and no event shall be delayed while adjustments are made to the chair;

(ix) Paratriathlete must ensure no part of their lower limbs can fall to the ground during the event;

(x) Paratriathlete shall wear an approved bike helmet at all times while seated in the chair.

c. Propulsion by any other method except the paratriathlete pushing on the wheels or push-rims will result disqualification. A paratriathlete attempting to overtake another paratriathlete carries the responsibility of ensuring full clearance of the chair being overtaken before cutting across. The paratriathlete being overtaken has the responsibility not to obstruct or impede the passing paratriathlete once the front wheel(s) of the passing chair are in sight.

d. TRI 1 athletes will be judged as finished, the moment any part of the torso, reaches the perpendicular line extending from the leading edge of the finish line.

9.13 Paratriathlon TRI 2 to TRI 6 Running Conduct/Equipment

a. Competitors may use prosthetics, canes or crutches to ambulate the course.

b. The only acceptable footwear on the run course (aside from prosthetics) are running shoes.

c. No guide dogs are allowed on the run course at any time.

9.14 Paratriathlon TRI 6a and TRI 6b Conduct

a. The following additional rules apply to all visually impaired (TRI 6) paratriathlete and their guides:

(i) All paratriathletes must have a guide of the same gender.

(ii) Each paratriathletes is allowed a maximum of one (1) guide during each race.

(iii) All paratriathletes must be tethered during the swim. The tether may be used around the waist, leg or foot.

(iv) All paratriathletes and guides must use a tandem bicycle. The specifications of the tandem bicycle are as follows:

(1) A tandem is a vehicle for two riders, with two wheels of equal diameter, which conforms to the general principles of UCI construction for bicycles. The front wheel shall be steerable by the front rider, known as the pilot. Both riders shall face forward in the traditional cycling position and the rear wheel shall be driven by both cyclists through a system comprising pedals and chains; and

(2) The tandem top tube and any additional strengthening tubes may slope to suit the morphological sizes of the riders.

(v) A paratriathlete cannot use a guide that has held a professional category race licence within 12 months prior to the date of competition.

(vi) All guides must comply with minimum age requirements as per the TA Participant Policy Document.

(vii) In the event of an injury or illness, and upon presentation of a medical certificate, a guide may be replaced up to 24 hours before the official start of the competition. No changes will be allowed after this deadline.

(viii) All TRI 6a and TRI 6b paratriathletes must be tethered during the run. They may receive verbal instructions only from their guide.

(ix) All TRI 6 paratriathletes shall use approved “black out glasses” during the entire run portion (beginning at their assigned space in the transition area.

(x) Paddleboards, kayaks, etc. (on the swim portion) or bicycles, motor bicycles, etc., (on the run portion) or any other mechanical means of transport by guides are not allowed.

(xi) At no time may a guide lead or pace the paratriathlete nor propel them forward by pulling or pushing during the swim and run

(xii) Whether or not a tether is being used, the paratriathlete and guide shall not be more than 0.5 metres apart at all times.

(xiii) As the TRI 6 paratriathlete crosses the finish line, the guide must be beside or behind the paratriathlete but not further apart than the required 0.5 metres maximum separation distance.

(xiv) The guide must abide by all the competition rules that also pertain to the TRI 6 paratriathlete.

10. CROSS TRIATHLON/WINTER TRIATHLON

Rules for these types of competitions can be found in the ITU Competition Rules on the ITU website (www.triathlon.org).

11. MODIFICATIONS TO THE RULES

These rules will apply to all events that fall within the jurisdiction of TA. To that end, throughout these RCR, unless otherwise specified, the term 'triathlon' is used in its generic form to imply any of those events.

It is important to know the intent and purpose of a rule so that it may be intelligently applied in a given situation. A competitor must not be permitted an advantage not intended by a rule, or to place the health or welfare of themself or others in jeopardy. To implement this philosophy, many of the rules are written in general terms. This practice minimises the necessity for a multiplicity of rules and provides the Technical Officials with ample authority to adapt their application of the rules to fit conditions. Technical Officials must base their determination on whether an advantage, not intended by the rules, has been gained or health or welfare has been jeopardised.

12. EXCEPTIONS TO THE RULES

These TA RCR will be applicable to all events sanctioned by TA or its' affiliated state/territory associations and are to be implemented by the relevant state or territory body as appropriate. Where the TA RCR conflict with the laws of the jurisdiction in which the event is to be held, those laws will override the TA RCR to the extent of the inconsistency, and competitors must be notified of the implications of these laws as early as possible and not later than prior to the start of the event. Exceptions for special circumstances in a particular event may only be gained from TA with prior approval. A request for an exception to these Rules must be made in

writing to the Chair of the NTC through the state or territory association to whom the application has been submitted or is being submitted.

13. SPECIAL RULES

A race Technical Delegate may approve the addition of special rules for a particular race, provided that:

a. Each additional special rule is made available in written form and is announced to the participants before the event; and

b. Each additional special rule and the reasons for its inclusion are advised to the Chair of the NTC before the day on which the event is to be conducted. The Chair of the NTC may invalidate the incorporation of an additional special rule only on the authority of the TA Board.

14. UNAUTHORISED EXCEPTIONS OR ADDITIONS

The unauthorised exception to or addition of a race competition rule will prevent an event from being sanctioned and will invalidate a sanction, which has already been granted to an event. This could result in legal complications, particularly in the case of accidents during the event and in subsequent requests for approval from state/territory and/or municipal authorities to use roads and waterways. Insurance authorities have also warned that claims made under such circumstances may be considered invalid.

15. RULE CHANGES

These RCR may be changed from time to time by the TA Board in its absolute discretion. Any such rule change shall be advised in writing to the affiliated state/territory associations at least 14 days before it is to take effect.

APPENDIX A: DEFINITIONS

Appellant
A competitor submitting an appeal.

Aquathlon
The term recognised by the ITU, TA and the Australian Sports Commission (ASC) for a sport of individual character and motivation which combines swimming and running skills in continuum. The TA term for a run-swim-run competition.

Assistance
Any attempt by an unauthorised or unofficial source to help or to stabilise a competitor.

Bicycle Course
That part of the race route over which it has been defined in the race brief that the bicycle is to be ridden, walked or carried. The bicycle course commences at the Bicycle Mount Zone and concludes the Bicycle Dismount Zone.

Duathlon
The term recognised by the ITU, TA and the ASC for a sport of individual character and motivation which combines bicycling and running skills in continuum. The TA term for a run-ride-run competition.

Elite
Elite category competitors who hold a professional membership, which in Australia includes Triathlon Australia membership.

Finisher
A competitor who completes the entire race course within the rules and crosses the finish line, with any part of their body.

Interference
A deliberate block, charge or abrupt motion which impedes another competitor.

Judgement Call
Any assessment of events, circumstances or the race environment by a technical official. For the avoidance of any doubt a judgement call is, but is not limited to, a determination that a competitor is guilty of drafting, blocking, or gaining an unfair advantage.

Open
Open category competitors can hold any level of TA membership.

Pass

When one competitor's bicycle draft zone overlaps another competitor's bicycle draft zone, makes continual forward progress through that zone and passes within a maximum period specified in Rule 3.12. A competitor cannot pass another competitor on the left hand side in a non-draft legal event.

Penalty Box

One or more designated areas on the course where competitors may be required to serve a time penalty for a rule violation.

Race Referee

A Technical Official who is responsible to the Race Technical Delegate to hear and make final decisions on all rule infringements reported by Technical Officials and on all protests.

Results

The timed finish positions of all competitors after infringement reports have been ruled on, protests and appeals have been heard, and penalties have been awarded.

Run Course

That part of the race route over which it has been defined in the race brief that the competitor is to run or walk. In triathlons and aquathlons, the run course commences at the exit from the Transition Zone boundary and concludes at the finish line. In duathlons, the first Run Course commences at the start line and finishes at the entry to the boundary of the Transition Zone; the second Run Course commences at the exit from the Transition Zone boundary and concludes at the finish line.

Sanction

A permit issued by the authority of TA for the conduct of a national championship, or a race of a national race series, or for an international event staged in Australia, and by a state/territory association, through the authority delegated to it by TA, for all other events. The issue of such a permit is a declaration by the sanctioning authority that plans for the event have been thoroughly inspected and provide the greatest potential for the conduct of a safe and fair event.

Speed Suit

A speedsuit must be comprised of 100% textile material such as nylon or lycra and must not include rubberised material such as polyurethane or neoprene. The speedsuit may contain a zipper.

Sports Conduct

The behaviour of a competitor during competition. Previously referred to as 'sportsmanship', good sports conduct is interpreted as fair, rational and courteous behaviour, while bad sports conduct is any behaviour on the part of a competitor which is judged to be unfair, unethical or dishonest, a violent act, intentional misconduct, abusive language, intimidating behaviour, or persistent infringement of the rules.

Stop-Start Time Penalty

A method of imposing a brief delay on a competitor who is assessed by a race official to have infringed a rule.

Swim Course

That part of the race route over which it has been so defined in the race brief. In triathlons and aquathlons, the swim course commences at the start line and concludes at the entry to the boundary of the Transition Zone.

Technical Delegate

A Technical Official who is qualified by TA as delegated to state/territory associations, who is responsible for ensuring that all aspects of the TA Race Competition Rules and Race Operations Procedures are fulfilled in preparation for, during, and after the event. Where appeals are lodged, the TD is responsible for convening and chairing the Race Competition Jury. The TD will normally be responsible for conducting or overseeing the conduct of race sanctioning. At lower end events where no TD is specifically appointed, the senior official present may also fulfil the role of TD.

Technical Official

Accredited race officials who are qualified by TA as Technical Officials delegated to state/territory associations, and are appointed to be responsible for observing, assessing and reporting on the performance of competitors in a sanctioned event in relation to TA Race Competition Rules (Race Officials), and those who consider and rule on infringement reports and protests (Race Referee) and appeals (Race Competition Jury).

Torso

That section of the body extending from the base of the neck to the base of the sternum.

Transition Zone

A location within a defined boundary which is not a part of the swim course, the bicycle course or the run course and within which each competitor is allocated an area for the storage of individual items of clothing and equipment.

Triathlon

A sport of **individual** character and initiative which offers a combination of swimming, cycling and running skills in continuum.

APPENDIX B: EXAMPLES OF YELLOW AND RED CARD INFRINGEMENTS

Common examples of yellow and red card infringements are listed below. This list is intended as a guide only and is not exclusive. Note that the same infringement may attract different penalties, depending on the competitive environment the context of the event, and the severity of the offence.

Please note: Two or more yellow cards may result in disqualification. A red card may also result in disqualification.

Conduct	Yellow Card		Red Card
	Stop-Start	Time Penalty	
Bicycle helmet not securely fastened	x		
Discard equipment	x	x	x
Illegal pass		x	
Blocking		x	
Drafting		x	
Deliberately not wearing race numbers provided	x		
Use of gloves or socks in the swim leg			x
Not completing the entire course			x
Using an MP3 player or a mobile phone			x
Failure to obey a Technical Official's instructions			x
Offensive behaviour such as nudity or personal toilet			x
External assistance			x
Abusive language or violent behaviour			x